ZONE	SYMBOL	REVISION	APPROVAL	DATE

RoHS Compliant

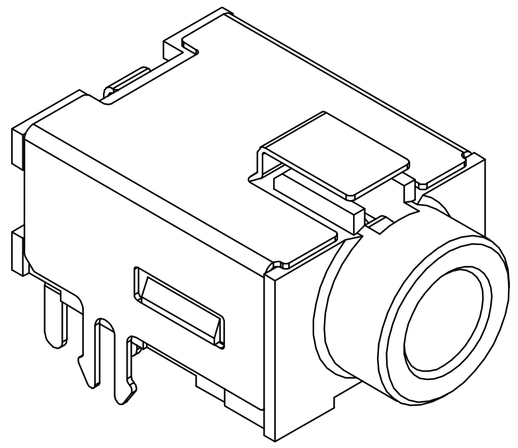

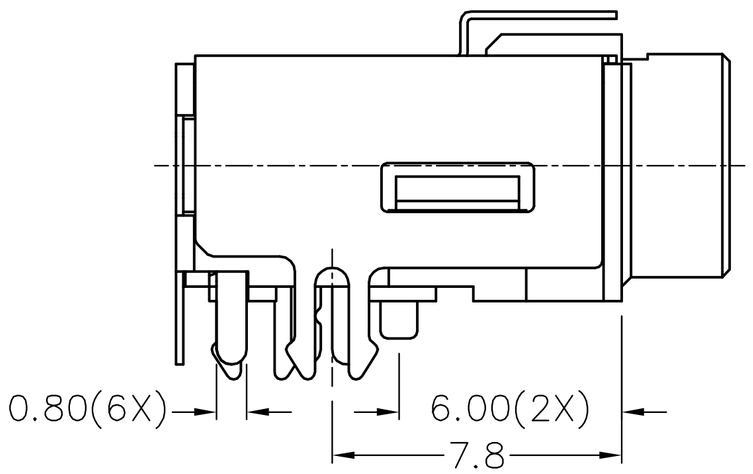

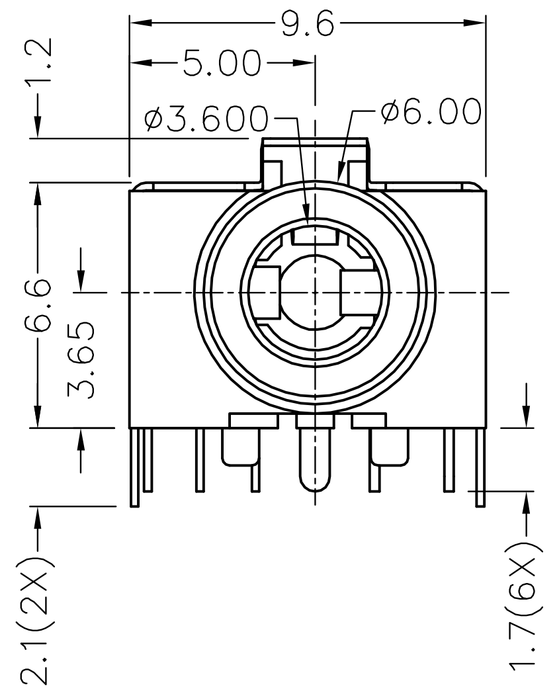

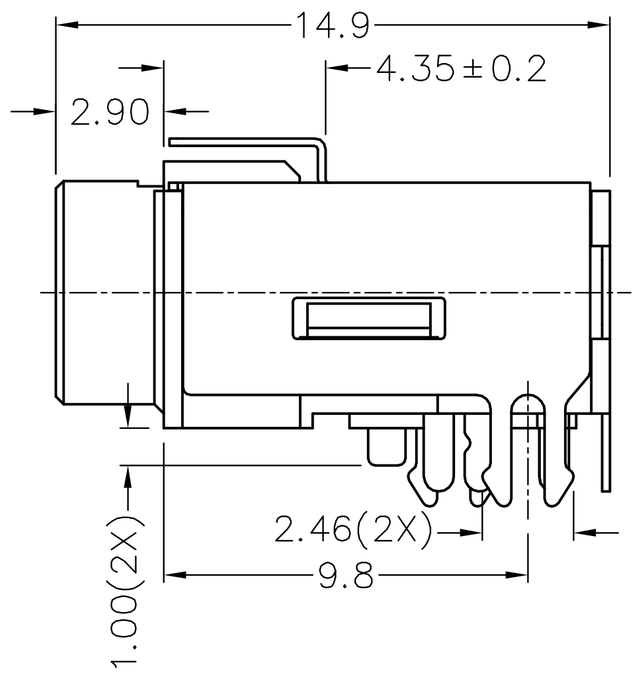

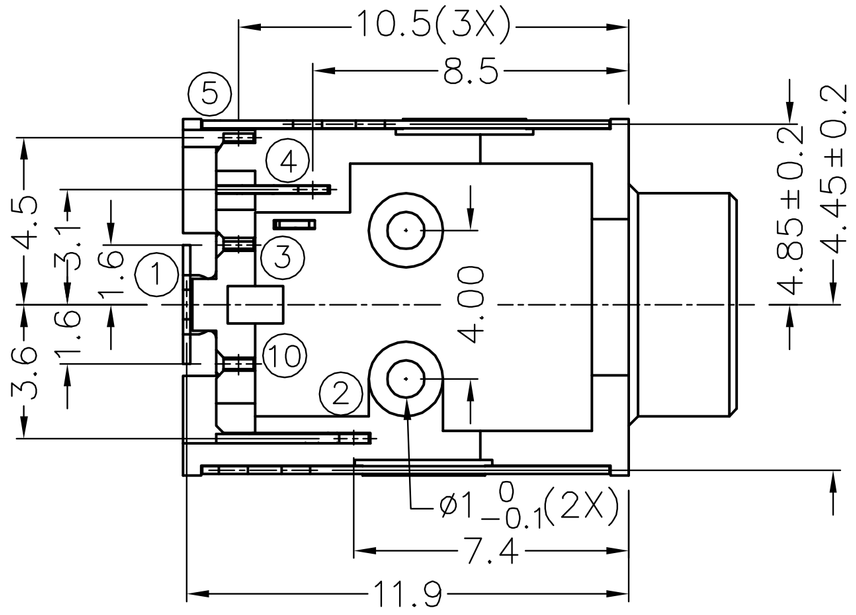

＊ MATERIAL

TERMINAL 1	: COPPER ALLOY
TERMINAL 2	: COPPER ALLOY
TERMINAL 3	: COPPER ALLOY
TERMINAL 4	: COPPER ALLOY
TERMINAL 5	: COPPER ALLOY
TERMINAL 10	: BRASS
SHIELD	: BRASS
HOUSING	: PA6T

MODEL NO.	TSH-5306S-2
SCHEMATIC	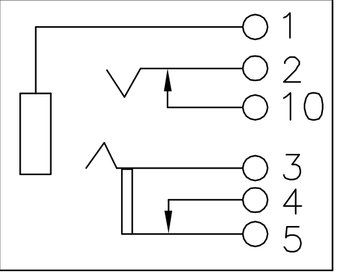

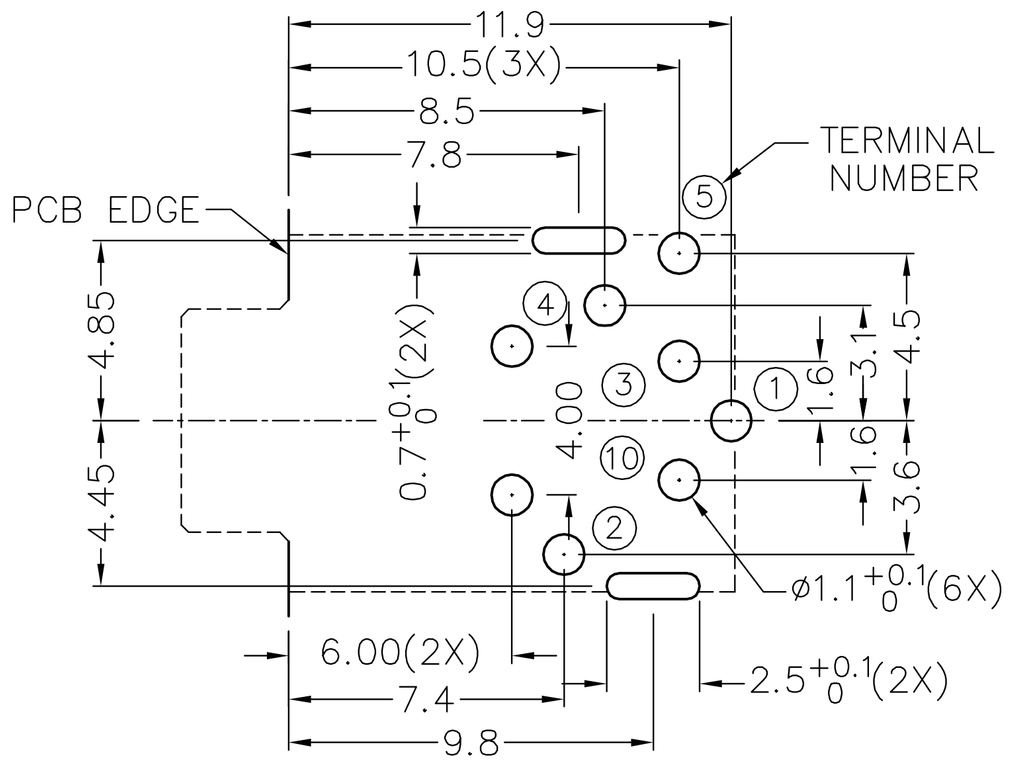

PCB LAYOUT
(TOP VIEW)

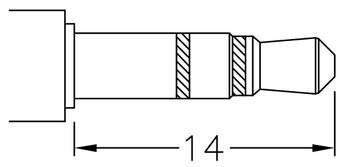

ø3.5 MATE PLUG

JOYNet Enterprise Co.,Ltd.

DESIGN	H.L.TAN	DATE	12-5-2011	SCALE	3:1
DRAWING	H.L.TAN	DATE	12-5-2011	MATERIAL	＊
CHECK		DATE		DWG. NO.	TZ\SH530S-2-PA6T/A
APPROVAL		DATE		SHEET	

PART NAME	3.5mm STEREO JACK	TOLERANCE UNLESS OTHERWISE SPECIFIED:	0.0±0.2 0.00±0.1 0.000±0.05	UNIT: mm
PART NO.	TSH-530S-2			