ZONE	SYMBOL	REVISION	APPROVAL	DATE

RoHS Compliant

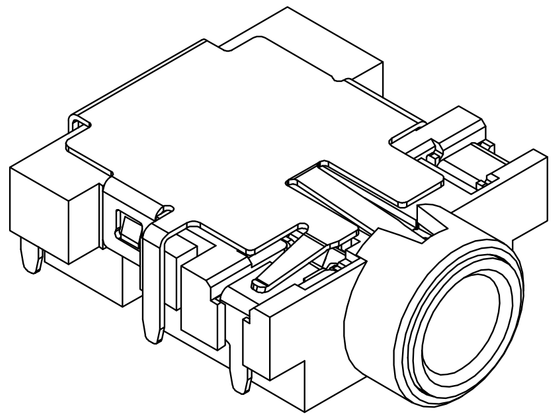

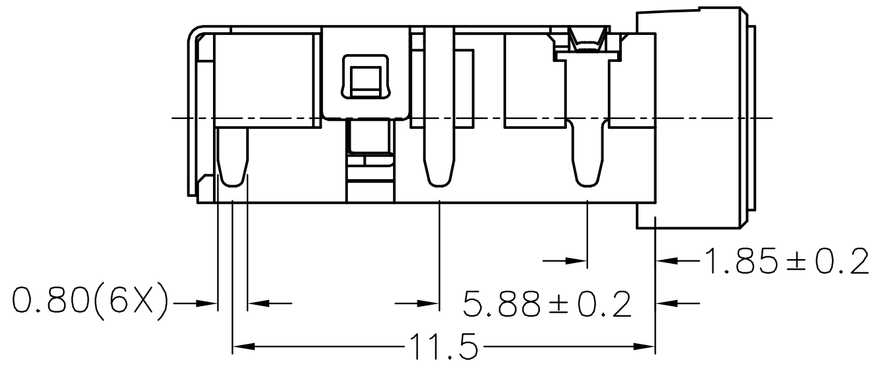

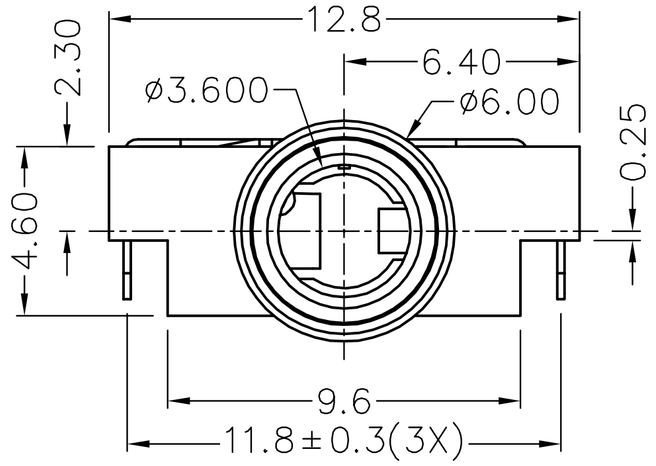

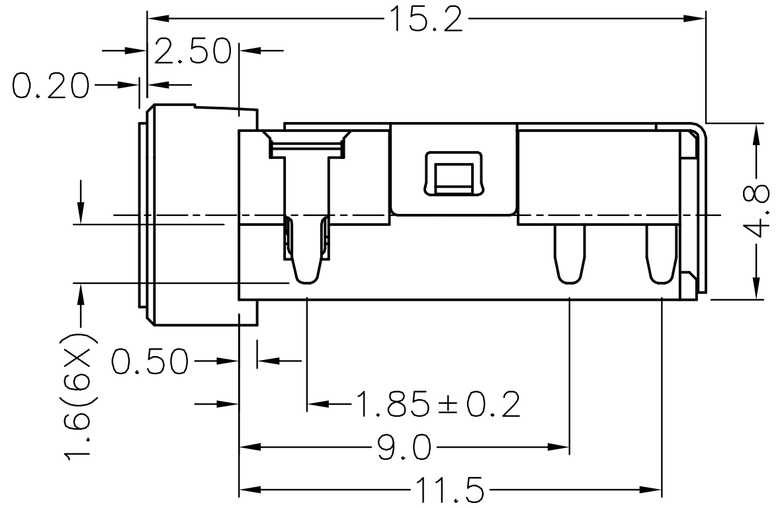

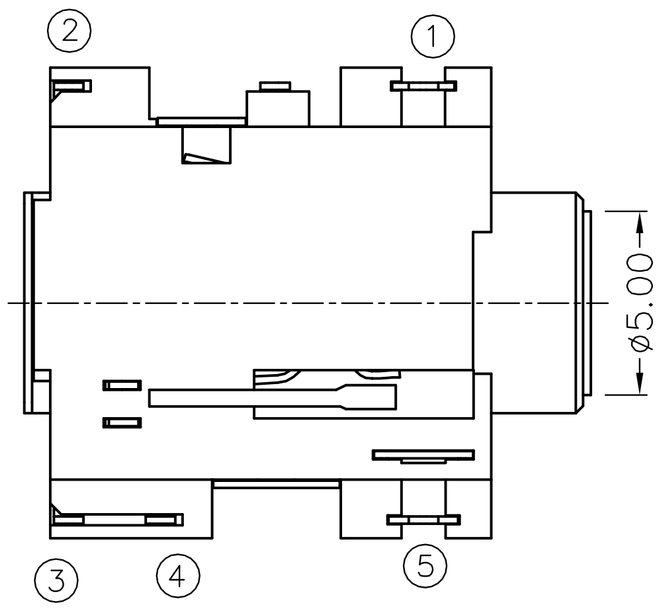

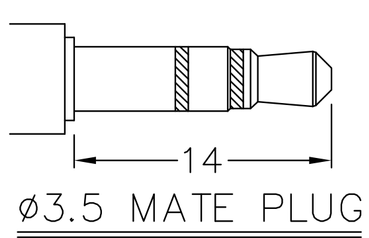

ø3.5 MATE PLUG

∗ MATERIAL

TERMINAL 1	: COPPER ALLOY
TERMINAL 2	: COPPER ALLOY
TERMINAL 3	: COPPER ALLOY
TERMINAL 4	: COPPER ALLOY
TERMINAL 5	: COPPER ALLOY
SHIELD	: COPPER ALLOY
BUSHING	: BRASS
HOUSING	: PA9T

MODEL NO.	TSH-5095DS
SCHEMATIC	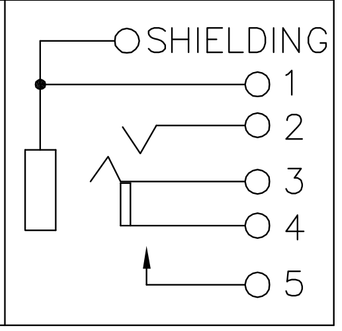

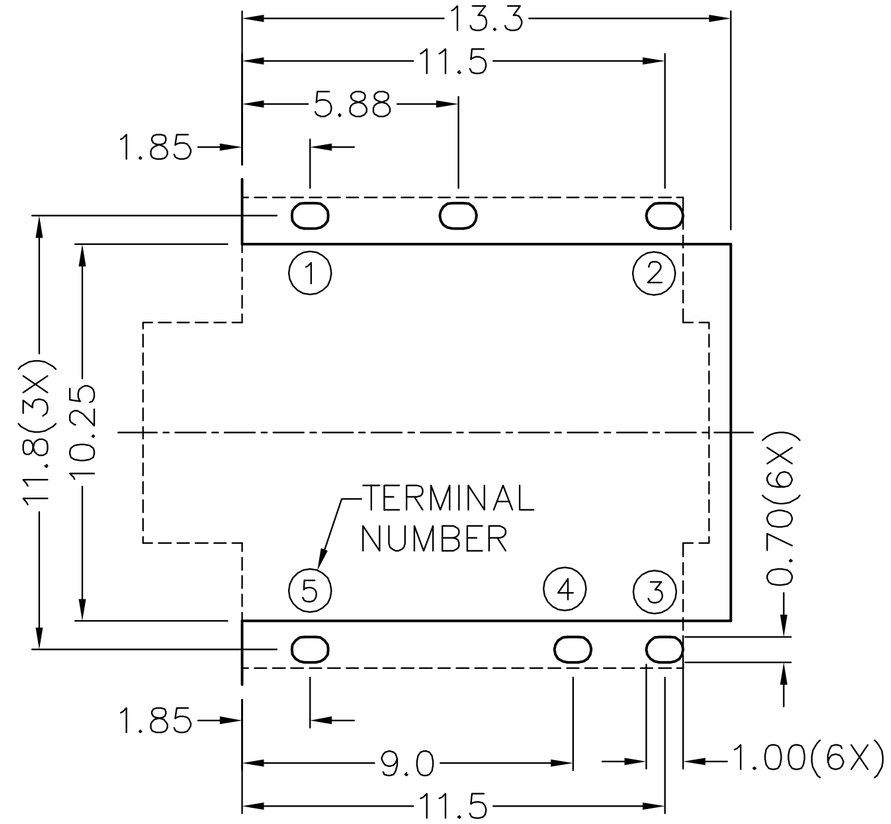

PCB LAYOUT
(TOP VIEW)

JOYNet Enterprise Co.,Ltd.

DESIGN	T.Y.LI	DATE	10-1-2009	SCALE	3:1
DRAWING	T.Y.LI	DATE	17-2-2009	MATERIAL	∗
CHECK		DATE		DWG. NO.	TZ\SH509DS-PA9T/A
APPROVAL		DATE		SHEET	

PART NAME	3.5mm SMD STEREO JACK
PART NO.	TSH-509DS

TOLERANCE UNLESS OTHERWISE SPECIFIED: 0.0±0.2, 0.00±0.1, 0.000±0.05

UNIT: mm