ZONE	SYMBOL	REVISION	APPROVAL	DATE

RoHS Compliant

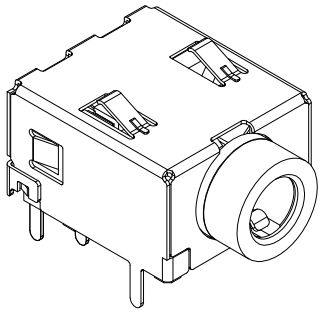

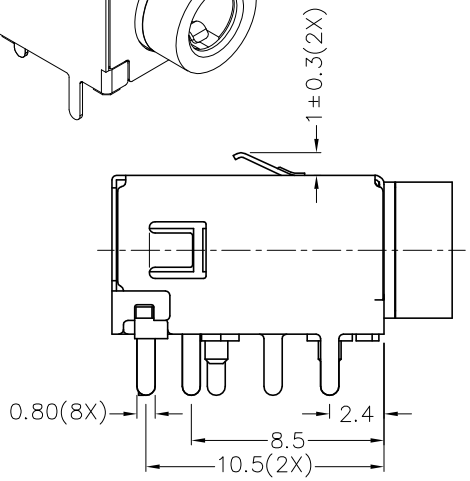

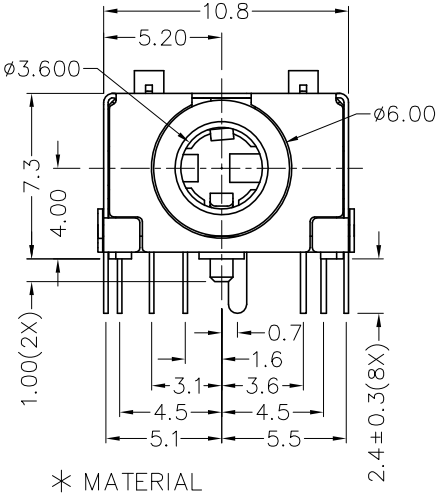

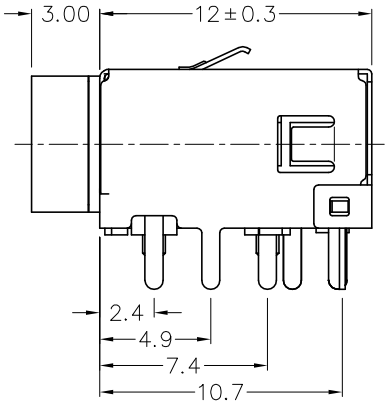

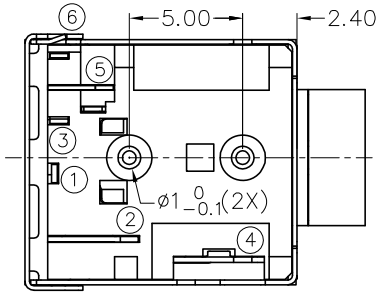

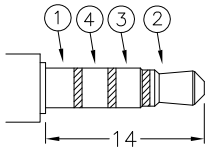

ø3.5 MATE PLUG

✳ MATERIAL

TERMINAL 1	: COPPER ALLOY
TERMINAL 2	: COPPER ALLOY
TERMINAL 3	: COPPER ALLOY
TERMINAL 4	: COPPER ALLOY
TERMINAL 5	: COPPER ALLOY
TERMINAL 6	: COPPER ALLOY
SHIELD	: COPPER ALLOY
BUSHING	: BRASS
HOUSING	: PA66

MODEL NO.	TSH-5026S-2
SCHEMATIC	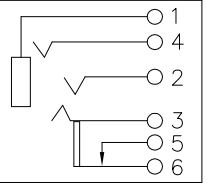

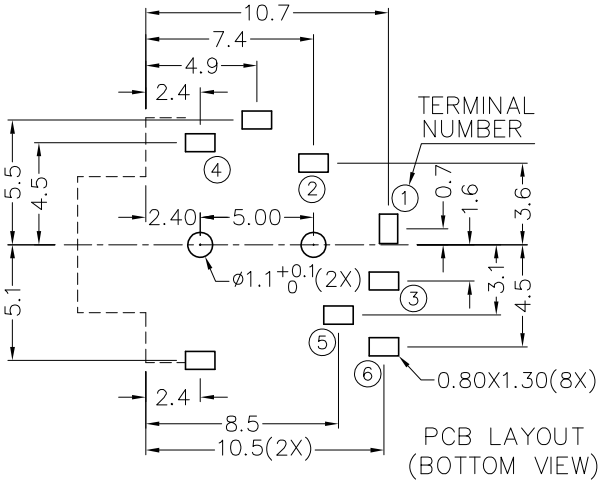

PCB LAYOUT (BOTTOM VIEW)

JOYNet Enterprise Co.,Ltd.

DESIGN	T.Y.LI	DATE	8-8-2007	SCALE	3:1
DRAWING	T.Y.LI	DATE	2-6-2008	MATERIAL	✳
CHECK		DATE		DWG. NO.	TZ\SH502S-2-PA66/A
APPROVAL		DATE		SHEET	

PART NAME	3.5mm STEREO JACK	TOLERANCE UNLESS OTHERWISE SPECIFIED:	0.0±0.2 0.00±0.1 0.000±0.05
PART NO.	TSH-502S-2	UNIT: mm	