ZONE	SYMBOL	REVISION	APPROVAL	DATE
		ADD MATE PLUG	J.X.KUANG	6-10-2006

RoHS Compliant

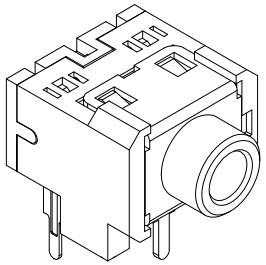

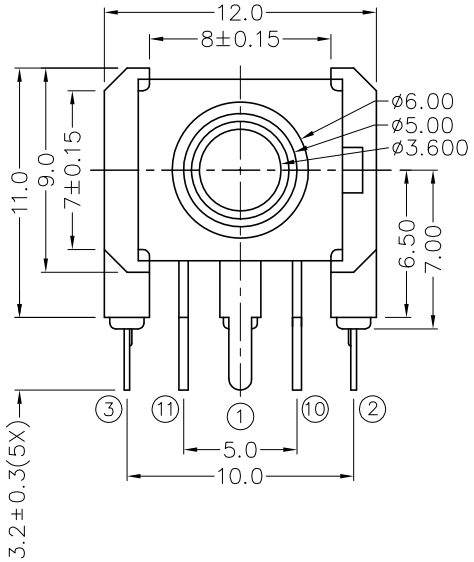

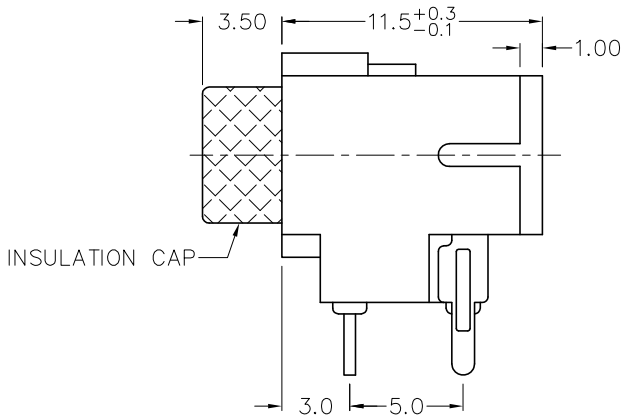

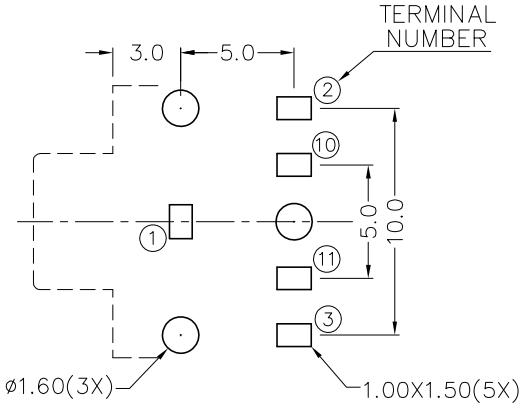

PCB LAYOUT
(BOTTOM VIEW)

MODEL NO.	TSH-3845P-2	TSH-3844PA-2	TSH-3844PB-2	TSH-3843P-2	TSH-3843AP-2
SCHEMATIC	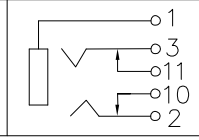	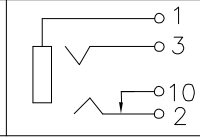	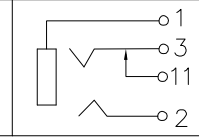	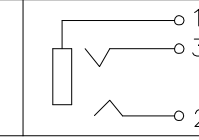	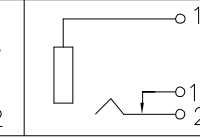

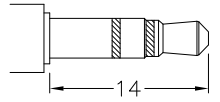

ø3.5 MATE PLUG

* MATERIAL

TERMINAL 1	: COLD ROLLED STEEL
TERMINAL 2	: COPPER ALLOY
TERMINAL 3	: COPPER ALLOY
TERMINAL 10	: BRASS
TERMINAL 11	: BRASS
BUSHING	: BRASS
SPRING	: STAINLESS STEEL
HOUSING	: PBT
COVER	: PBT
INSULATION CAP	: PBT

JOYNet Enterprise Co.,Ltd.

DESIGN	J.JIANG	DATE	17-12-2004	SCALE	3:1
DRAWING	L.L.ZHANG	DATE	6-10-2006	MATERIAL	*
CHECK		DATE		DWG. NO.	TZ\SH384P-2-PBT/B
APPROVAL		DATE		SHEET	

PART NAME	3.5mm STEREO JACK	TOLERANCE UNLESS OTHERWISE SPECIFIED:	0.0±0.2 0.00±0.1 0.000±0.05
PART NO.	TSH-384P-2	UNIT: mm	

DCF-04/A