ZONE	SYMBOL	REVISION	APPROVAL	DATE
		ADDED INDICATION OF COPLANARITY	J.X.KUANG	21-11-2008

RoHS Compliant

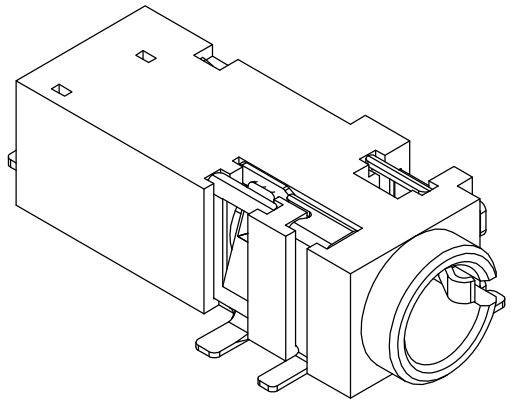

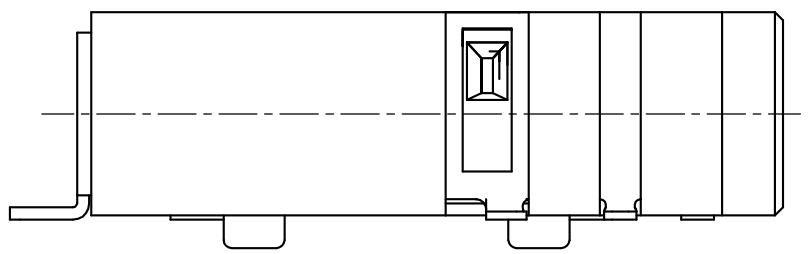

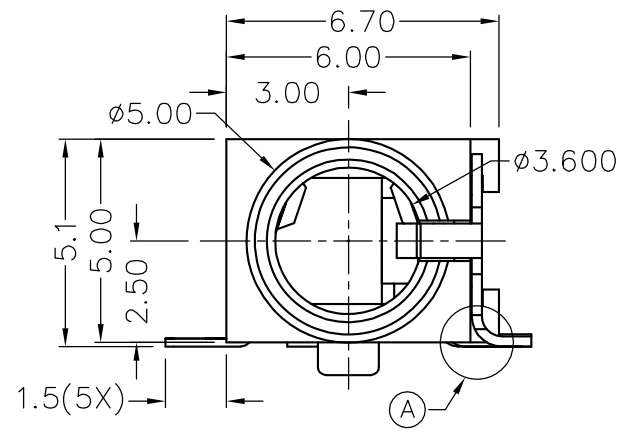

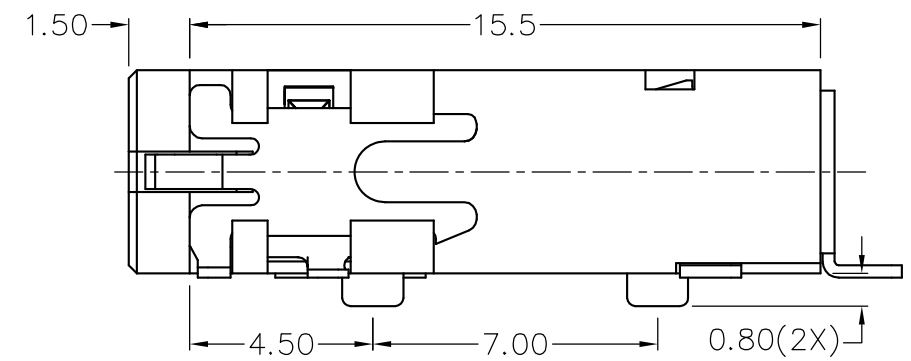

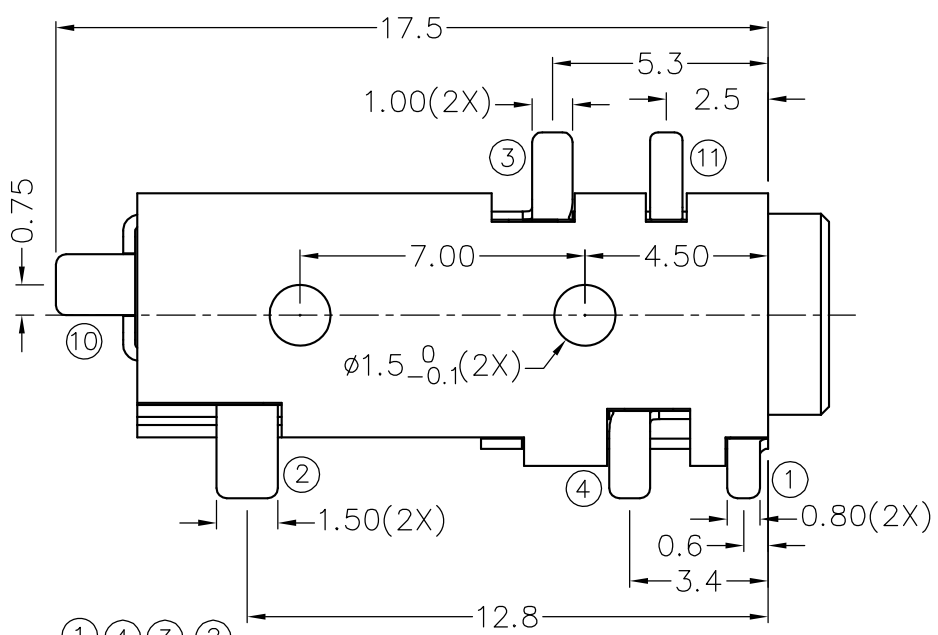

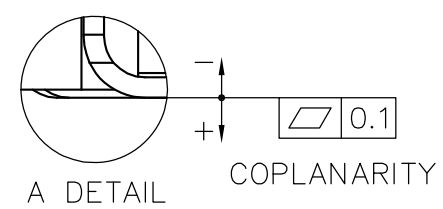

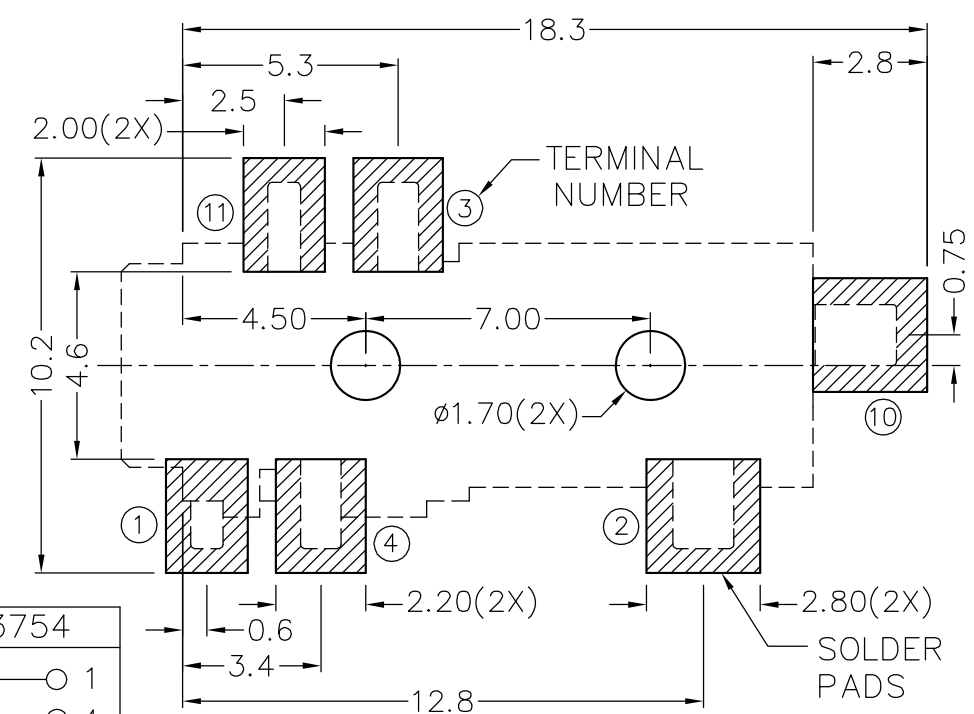

RECOMMENDED SOLDER PAD LAYOUT

* MATERIAL

TERMINAL 1 : COPPER ALLOY
TERMINAL 2 : COPPER ALLOY
TERMINAL 3 : COPPER ALLOY
TERMINAL 4 : COPPER ALLOY
TERMINAL 10 : BRASS
TERMINAL 11 : COPPER ALLOY
HOUSING : PA6T

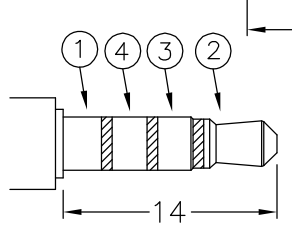

ø3.5 MATE PLUG

MODEL NO.	TSH-3756	TSH-3755A	TSH-3755B	TSH-3754
SCHEMATIC	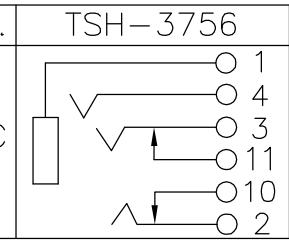	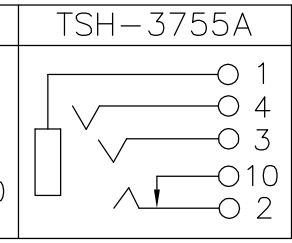	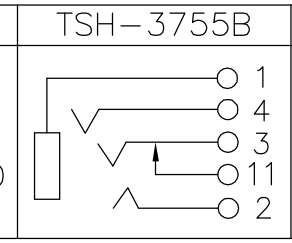	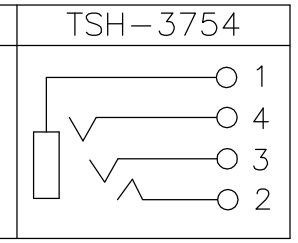

JOYNet Enterprise Co.,Ltd.

DESIGN	J.JIANG	DATE	3-5-2004	SCALE	4:1
DRAWING	T.Y.LI	DATE	21-11-2008	MATERIAL	*
CHECK		DATE		DWG. NO.	TZ\SH375-PA6T/F
APPROVAL		DATE		SHEET	

PART NAME	3.5mm SMD STEREO JACK	TOLERANCE UNLESS OTHERWISE SPECIFIED:	0.0±0.2 0.00±0.1 0.000±0.05	UNIT: mm
PART NO.	TSH-375			