ZONE	SYMBOL	REVISION	APPROVAL	DATE

RoHS Compliant

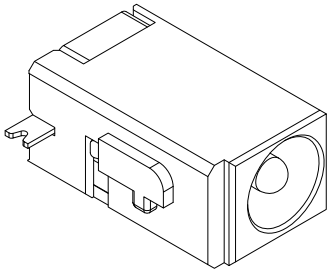

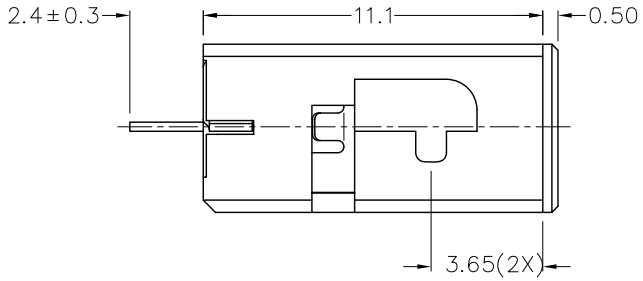

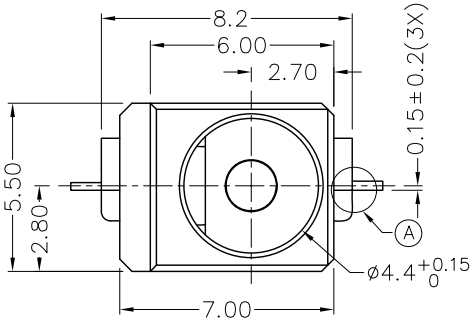

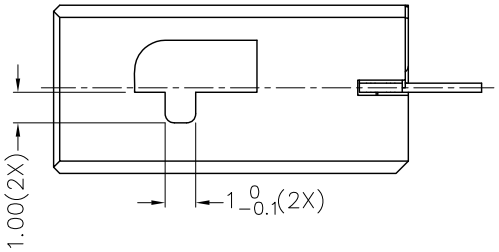

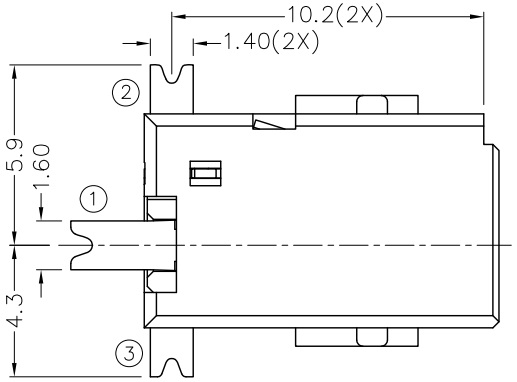

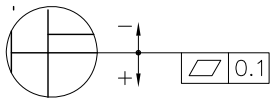

A DETAIL COPLANARITY

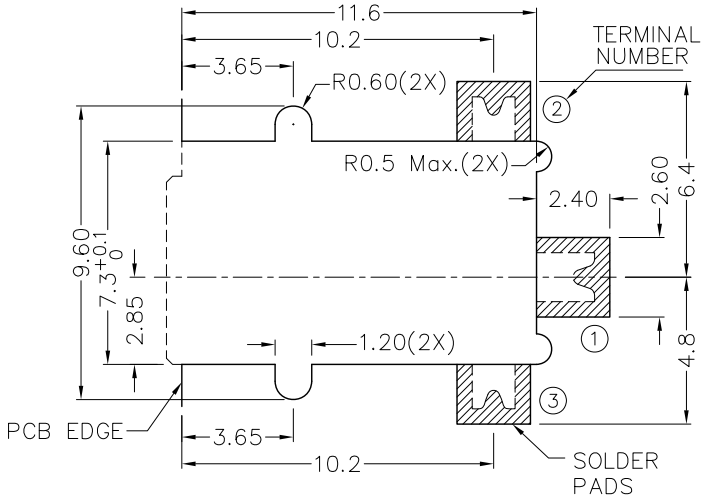

RECOMMENDED SOLDER PAD LAYOUT (TOP VIEW)

* MATERIAL

TERMINAL 1 : BRASS
TERMINAL 2 : COPPER ALLOY
TERMINAL 3 : BRASS
HOUSING : PA6T

MODEL NO.	TDC−095DH
SCHEMATIC	1 / 3 / 2
CENTER PIN	ø1.65mm

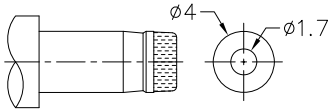

DC MATE PLUG

JOYNet Enterprise Co.,Ltd.

DESIGN	J.CHEN	DATE	23−8−2011	SCALE	4:1
DRAWING	J.CHEN	DATE	23−8−2011	MATERIAL	*
CHECK		DATE		DWG. NO.	TZ\DC095DH−PA6T/A
APPROVAL		DATE		SHEET	

PART NAME	HIGH CURRENT SMD DC POWER SOCKET	TOLERANCE UNLESS OTHERWISE SPECIFIED:	0.0±0.2 / 0.00±0.1 / 0.000±0.05
PART NO.	TDC−095DH	UNIT: mm	