ZONE	SYMBOL	REVISION	APPROVAL	DATE

RoHS Compliant

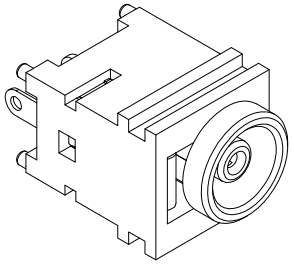

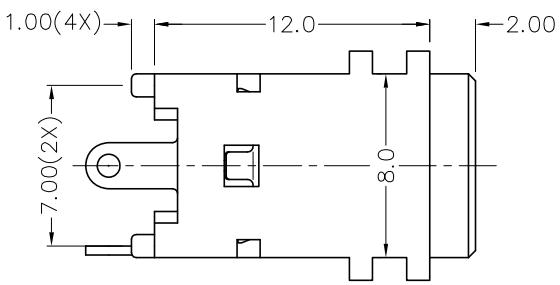

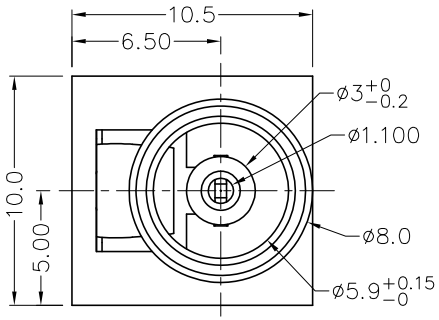

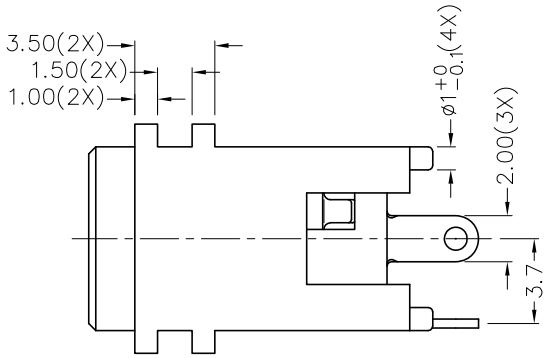

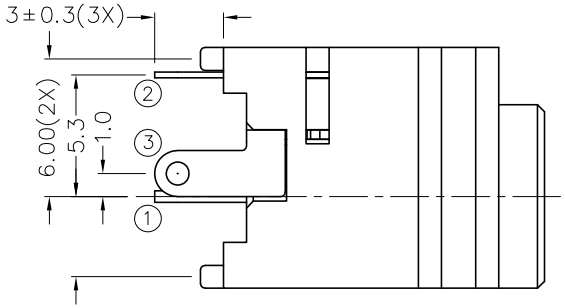

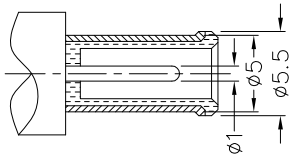

DC MATE PLUG

＊ MATERIAL

TERMINAL 1 : BRASS
TERMINAL 2 : COPPER ALLOY
TERMINAL 3 : BRASS
HOUSING : PA66

MODEL NO.	TDC−092
SCHEMATIC	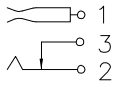

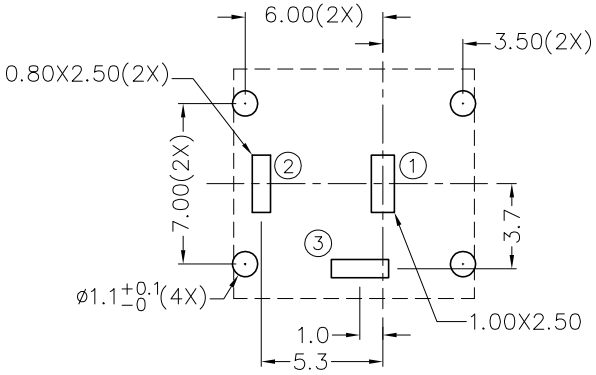

PCB LAYOUT
(TOP VIEW)

JOYNet Enterprise Co.,Ltd.

				DESIGN	G.P.YI	DATE	17−2−2011	SCALE	3:1
				DRAWING	G.P.YI	DATE	17−2−2011	MATERIAL	＊
PART NAME	DC POWER SOCKET	TOLERANCE UNLESS OTHERWISE SPECIFIED:	0.0±0.2 0.00±0.1 0.000±0.05	CHECK		DATE		DWG. NO.	TZ\DC092−PA66/A
PART NO.	TDC−092		UNIT: mm	APPROVAL		DATE		SHEET	