| ZONE | SYMBOL | REVISION | APPROVAL | DATE |
|---|---|---|---|---|
| | | | | |
| | | | | |
| | | | | |

RoHS Compliant

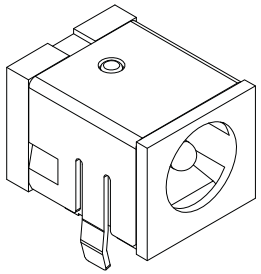

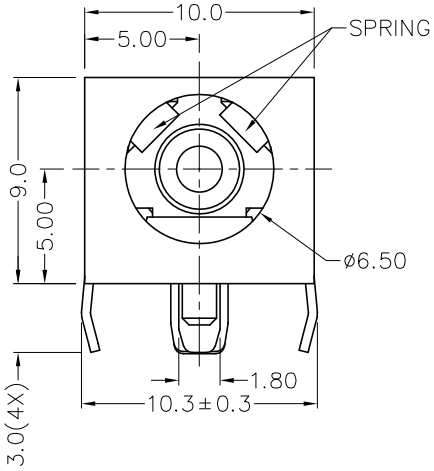


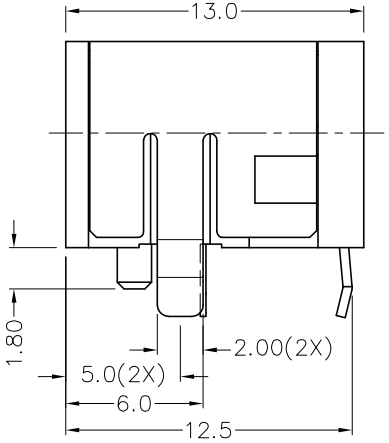


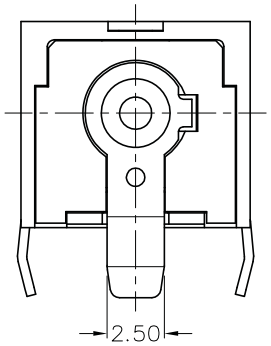


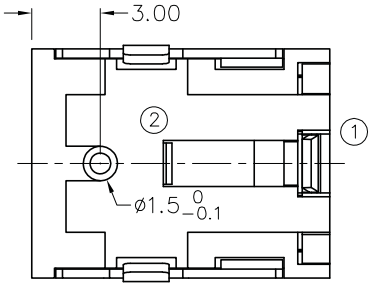


＊ MATERIAL

| | |
|---|---|
| CENTRE PIN | : COPPER |
| TERMINAL 1 | : BRASS |
| TERMINAL 2 | : COPPER ALLOY |
| SPRING | : COPPER ALLOY |
| SHIELD | : BRASS |
| HOUSING | : PBT |
| COVER | : PBT |

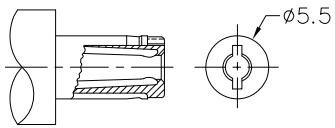


DC MATE PLUG

| MODEL NO. | TDC−078HS |
|---|---|
| SCHEMATIC | 1 / 2 |
| CENTER PIN | ø2mm |
| | ø2.5mm |

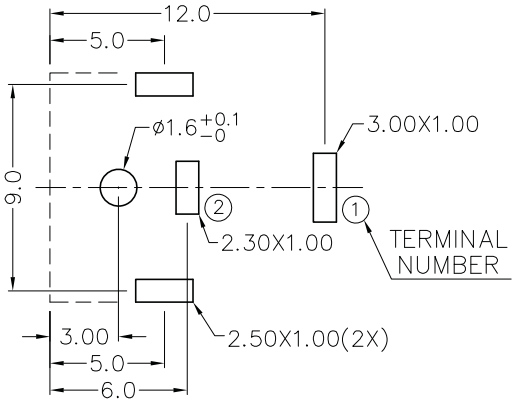


PCB LAYOUT
(BOTTOM VIEW)

JOYNet Enterprise Co.,Ltd. Technology Profession Service

| | | | | | | | |
|---|---|---|---|---|---|---|---|
| | | | | DESIGN | T.Y.LI | DATE | 20−8−2008 | SCALE | 3:1 |
| | | | | DRAWING | T.Y.LI | DATE | 20−8−2008 | MATERIAL | ＊ |
| PART NAME | HIGH CURRENT DC POWER SOCKET | TOLERANCE UNLESS OTHERWISE SPECIFIED: | 0.0±0.2 0.00±0.1 0.000±0.05 | UNIT: mm | CHECK | | DATE | | DWG. NO. | TZ\DC078HS−PBT/A |
| PART NO. | TDC−078HS | | | | APPROVAL | | DATE | | SHEET | |