ZONE	SYMBOL	REVISION	APPROVAL	DATE

RoHS Compliant

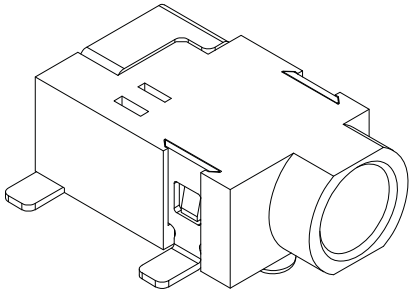

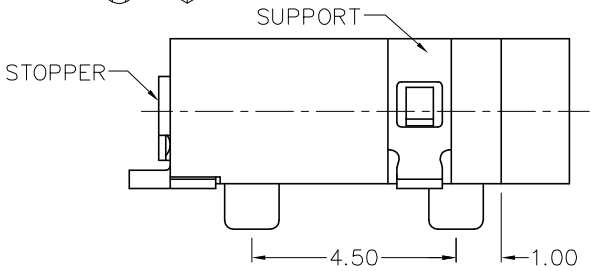

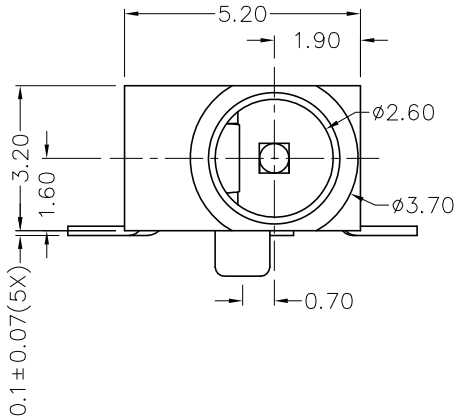

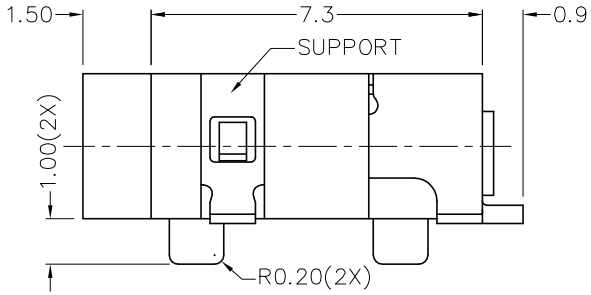

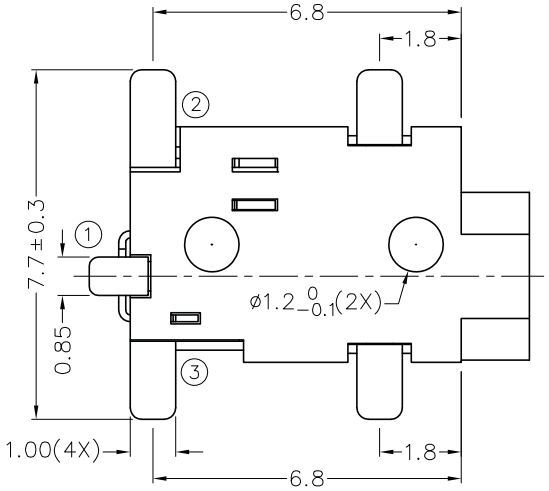

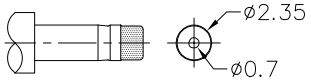

DC MATE PLUG

＊ MATERIAL

TERMINAL 1	: BRASS
TERMINAL 2	: COPPER ALLOY
TERMINAL 3	: BRASS
SUPPORT	: BRASS
STOPPER	: STAINLESS STEEL
HOUSING	: PA6T

MODEL NO.	TDC−065D
SCHEMATIC	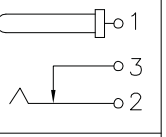
CENTER PIN	ø0.65mm

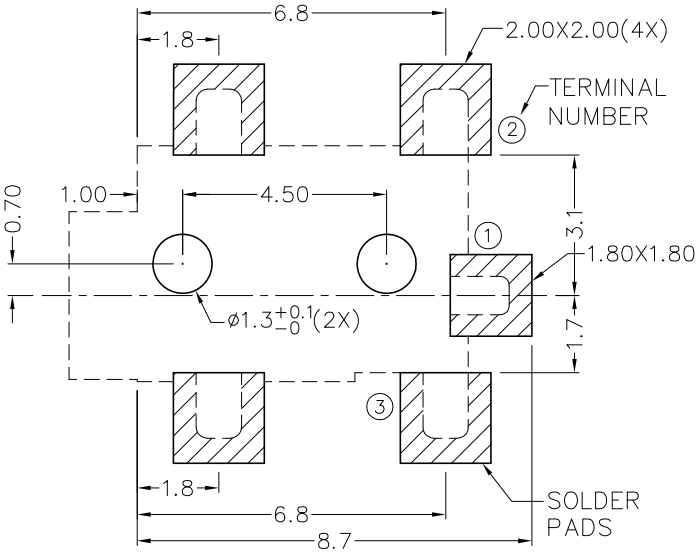

RECOMMENDED SOLDER PAD LAYOUT

JOYNet Enterprise Co.,Ltd. ▸ Technology ▸ Profession ▸ Service

DESIGN	T.Y.LI	DATE	28−2−2006	SCALE	6:1
DRAWING	T.Y.LI	DATE	28−2−2006	MATERIAL	＊
CHECK		DATE		DWG. NO.	TZ\DC065D−PA6T/A
APPROVAL		DATE		SHEET	

PART NAME	SMD DC POWER SOCKET	TOLERANCE UNLESS OTHERWISE SPECIFIED:	0.0±0.2 / 0.00±0.1 / 0.000±0.05
PART NO.	TDC−065D	UNIT: mm	

DCF−04/A